FuehlerSysteme eNET International
Die Marke für Sensorik

EN **DATA SHEET**

KM/E

Duct temperature transducer

Measuring size: temperature
Output: 0-10 V, 4-20 mA, 2 Relay
Highlights: easy to install with included mounting flange, 16 measuring ranges per device, 1 freely programmable measurement range

MADE IN GERMANY

Description

The KM/E cable transducer registers the temperature in gaseous media and converts this measured value into a linear output signal 0-10 V respectively 4-20 mA.
As an option the temperature transducer has two potential-free changeover contacts and a backlit display. The display content can be rotated in 90° steps using a menu and the measured value, the switching threshold set, the state of the respective relay, the MIN/MAX measured values for the selected intervals(1 h / 6 h / 12 h / 24 h) etc. can be read out.
On the display version the user can, via the menu, specify an individual temperature range.
Using the installation flange, included in the scope of delivery, the temperature transducer is fastened, for example, directly to the duct, container etc. and can be quickly and easily be replaced during service.

Technical Specifications

Measurement range temp.	-30...+150°C
Scales	-50...0°C, -50...+50°C, -50...+150°C, -30...+20°C, -30...+70°C, -20...+50°C, -20...+80°C, -20...+120°C, -20...+150°C, -10...+15°C, 0...+50°C, 0...+100°C, 0...+150°C, 0...+200°C, 0...+250°C, +10...+35°C
Measurement range configuration	1 freely programmable measuring range via the menu input in the display (span min. 25K)
Accuracy	±0,2 K + max. ±1,5% Span
Supply voltage analog 0-10 V	24 V AC/DC (±5%)
Supply voltage analog 4-20 mA	15...36 V DC, depends on liability (Ubmin = 15 V + Rload*0,02A)
Current consumption at 0-10 V	typ. 10 mA, 30 mA peak current consumption for 50 ms at switching moment at option relay
Current consumption at 4-20 mA	max. 20 mA / output, 40 mA peak current consumption for 50 ms at switching moment at option relay
Analogue output 0-10 V	3-wire connection, min. load resistance 100 kOhm
Analogue output 4-20 mA	2-wire connection (transmitter), max. RLoad(Ohm) = (+Ub - 15 V) / 0,02 A
Alarm output	2 x potential-free change-over contact, 48 V, 1 A
Switching Hysteresis Relay	Temperature: 2K (without display), 0,5...5K adjustable (with display)
Electrical connection	screw terminals max. 1,5 mm²
Housing	Polycarbonate PC UL 94 V0 with hinge locks, color signal white similar to RAL 9003
Cable gland	PG11 high-strength cable gland with strain relief
Display	optional LCD display with backlight on/off/auto
Material	Protection sleeve: stainless steel VA 1.4571
Dimensions	Housing: L 89 x W 80 x H 47 mm, Protection sleeve: Ø 6 mm
Protection type	IP65
Protection class	III
Working range r.H.	0...98% r.H. in contaminant-free, non-condensing air
Working temperature	Probe: -30...+150°C, Electronic: -20...+70°C
Storage temperature	-20...+70°C
Installation	mounting flange (in scope of delivery)
Approvals	CE, EAC, RoHS

Variants

Article Number			
MR temp. preset	Output temperature	Installation length	Version
KM/E-I100			
0...+100°C	4-20 mA	100 mm	without display
KM/E-I100-2R			
0...+100°C	4-20 mA, 2 changer	100 mm	without display
KM/E-I100D			
0...+100°C	4-20 mA	100 mm	with display
KM/E-I100D-2R			
0...+100°C	4-20 mA, 2 changer	100 mm	with display
KM/E-I200			
0...+100°C	4-20 mA	200 mm	without display
KM/E-I200-2R			
0...+100°C	4-20 mA, 2 changer	200 mm	without display
KM/E-I200D			
0...+100°C	4-20 mA	200 mm	with display
KM/E-I200D-2R			
0...+100°C	4-20 mA, 2 changer	200 mm	with display
KM/E-I300			
0...+100°C	4-20 mA	300 mm	without display
KM/E-I300-2R			
0...+100°C	4-20 mA, 2 changer	300 mm	without display
KM/E-I300D			
0...+100°C	4-20 mA	300 mm	with display
KM/E-I300D-2R			
0...+100°C	4-20 mA, 2 changer	300 mm	with display
KM/E-I400			
0...+100°C	4-20 mA	400 mm	without display
KM/E-I400-2R			
0...+100°C	4-20 mA, 2 changer	400 mm	without display
KM/E-I400D			
0...+100°C	4-20 mA	400 mm	with display
KM/E-I400D-2R			
0...+100°C	4-20 mA, 2 changer	400 mm	with display

Article Number			
MR temp. preset	Output temperature	Installation length	Version
KM/E-U100			
0...+100°C	0-10 V	100 mm	without display
KM/E-U100-2R			
0...+100°C	0-10 V, 2 changer	100 mm	without display
KM/E-U100D			
0...+100°C	0-10 V	100 mm	with display
KM/E-U100D-2R			
0...+100°C	0-10 V, 2 changer	100 mm	with display
KM/E-U200			
0...+100°C	0-10 V	200 mm	without display
KM/E-U200-2R			
0...+100°C	0-10 V, 2 changer	200 mm	without display
KM/E-U200D			
0...+100°C	0-10 V	200 mm	with display
KM/E-U200D-2R			
0...+100°C	0-10 V, 2 changer	200 mm	with display
KM/E-U300			
0...+100°C	0-10 V	300 mm	without display
KM/E-U300-2R			
0...+100°C	0-10 V, 2 changer	300 mm	without display
KM/E-U300D			
0...+100°C	0-10 V	300 mm	with display
KM/E-U300D-2R			
0...+100°C	0-10 V, 2 changer	300 mm	with display
KM/E-U400			
0...+100°C	0-10 V	400 mm	without display
KM/E-U400-2R			
0...+100°C	0-10 V, 2 changer	400 mm	without display
KM/E-U400D			
0...+100°C	0-10 V	400 mm	with display
KM/E-U400D-2R			
0...+100°C	0-10 V, 2 changer	400 mm	with display

Accessories

MFL/E

Mounting flange

SWS/A

Radiation and weather protection

motrona AX350

AX350: touchMATRIX® Process Indicator with two 16 bit Analog Inputs

motrona AX020

AX020: Process Indicator for Analog Signals
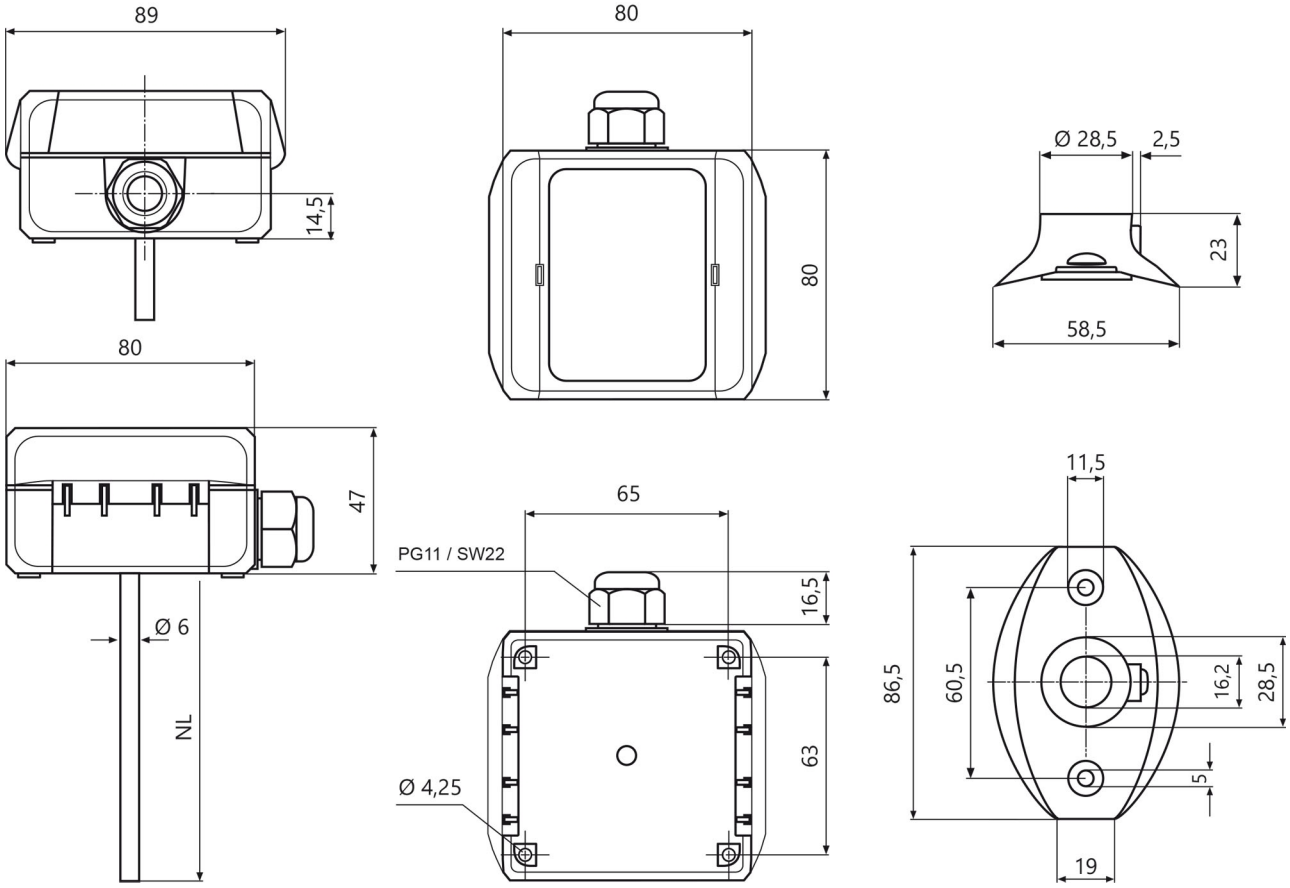
Dimensional Drawing